frumento
Kältetechnische Produkte

Product information

CoolproFi CP 65 A

Art.Nr.: 80.5025.45



1.426,69EUR

incl. 19% VAT plus Shipping

frumento
Kältetechnische Produkte

Product information





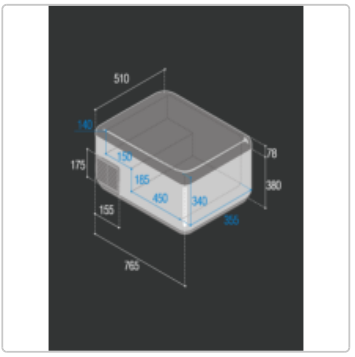

Model

CP 65 A

Capacity 65 liters Dimensions WxDxH 725x510x450 mm Voltage 12-24 V/DC-220 AC LED Thermostat adjustment + 10°C...-20°C Nominal input 40 W Weighs 24 kg