frumento
Kältetechnische Produkte

Product information

CooLmaster CM 65

Art.Nr.: 70.2926.02



804,00EUR

incl. 19% VAT plus Shipping

frumento
Kältetechnische Produkte

Product information





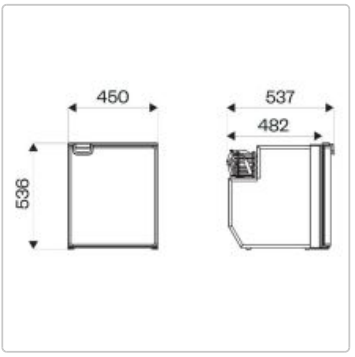

Model CM 65 Capacity 65 liters Dimensions WxDxH 450x482x536 mm Power supply 12-24 V/DC Thermostat setting + 10°C...-0°C Nominal power 40 W Freezer compartment capacity 5 liters freezer weight 20 kg Certifications CE, E-Mark, EMC