frumento
Kältetechnische Produkte

Product information

BD1,4F

Art.Nr.: 65.1222.12



frumento
Kältetechnische Produkte

Product information

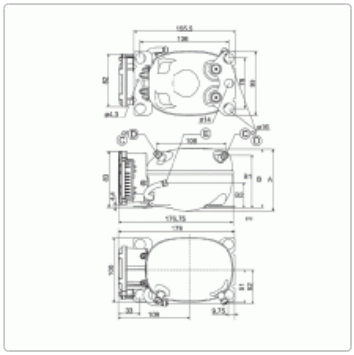

The **BD1.4F-AUTO** is optimized for applications in the automotive segment. It is designed to save space and weight and offers low energy consumption in operation and standby mode, for automotive infrastructures.